LKP010-2704 / LKP010-2705 / LKP010-2706

□30 mm, offset 75 mm

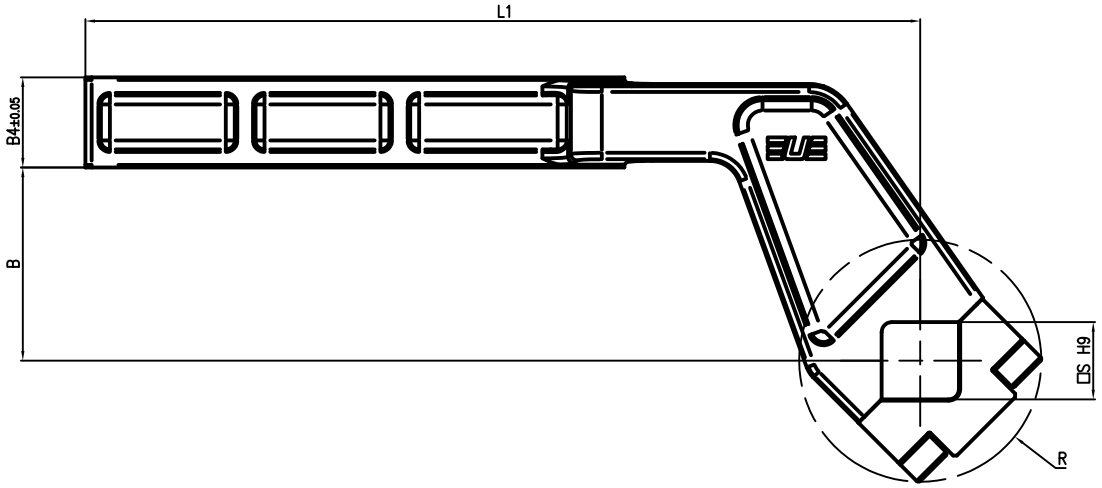

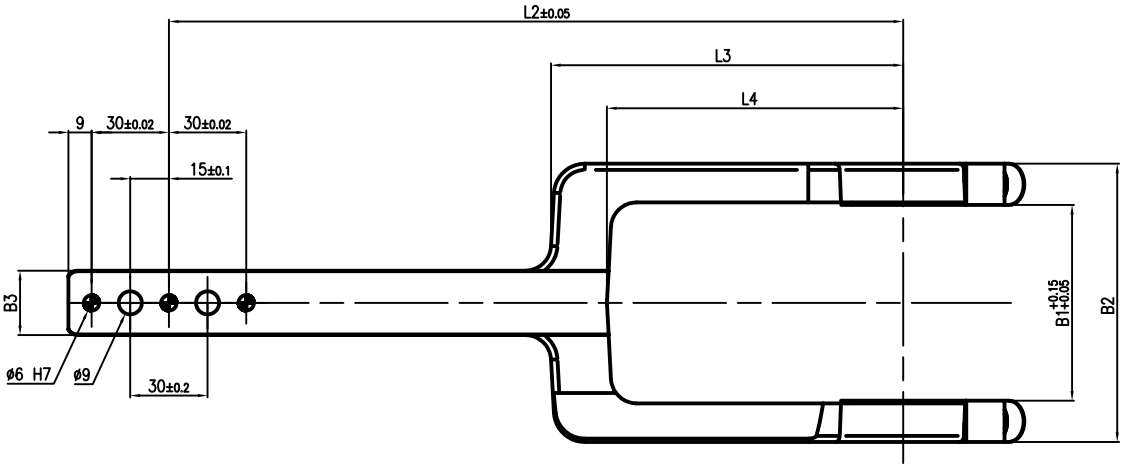

LKP-Code	B	B1	B2	B3	B4	L1	L2	L3	L4	R	S	Material
LKP010-2704	75	76	108	25	35	204	165	135	115	47	30	Steel
LKP010-2705	75	76	108	25	35	264	225	135	115	47	30	Steel
LKP010-2706	75	76	108	25	35	324	285	135	115	47	30	Steel

Subject to technical modifications without notice